BIRD-OUT®
INSTALLATION

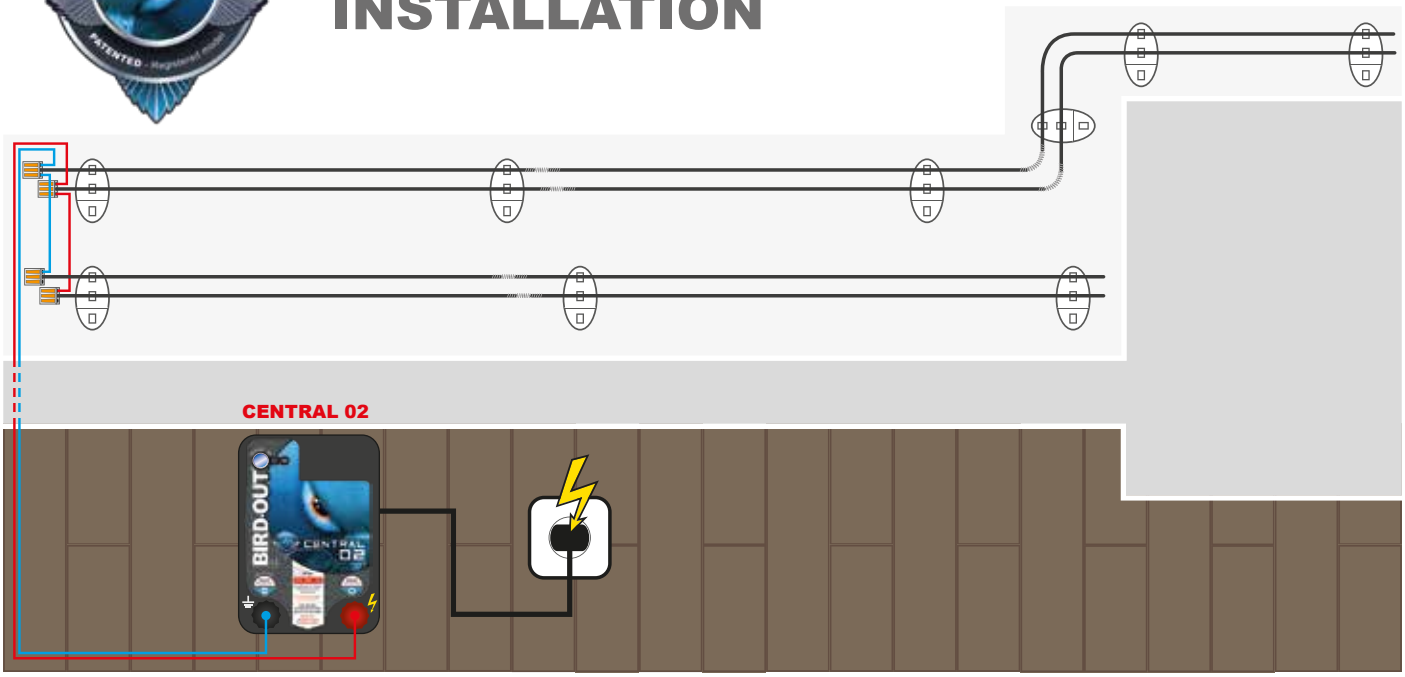

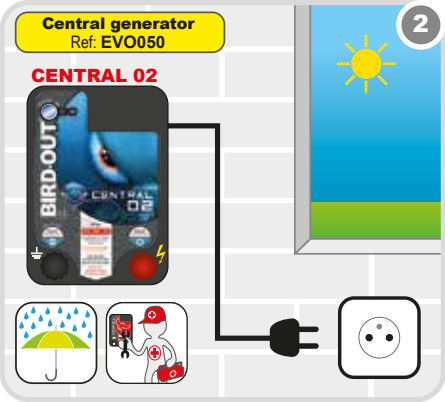

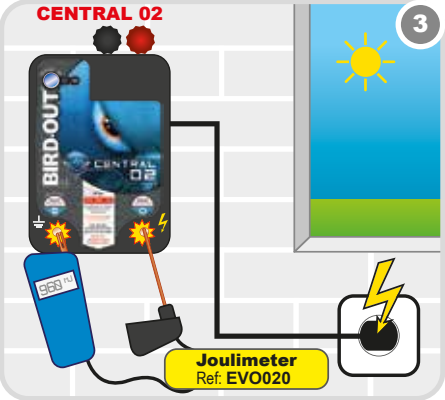

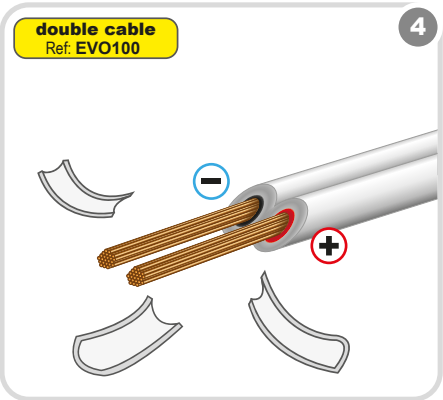

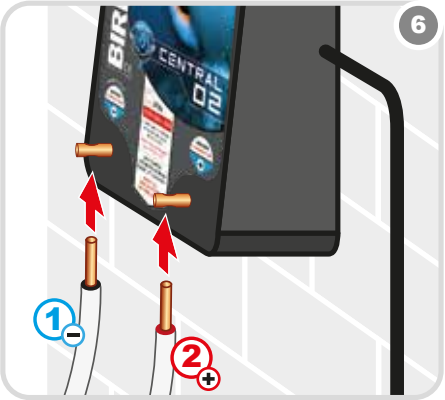

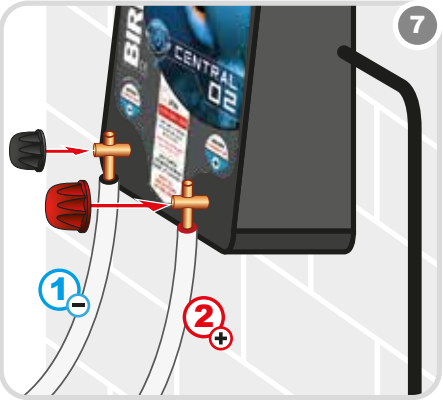

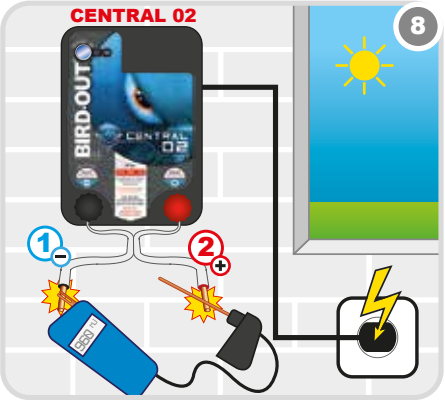

Toute reproduction interdite © 2020 copyright all rights reserved

9
CENTRAL 02
BIRD-OUT
CENTRAL 02
1
2

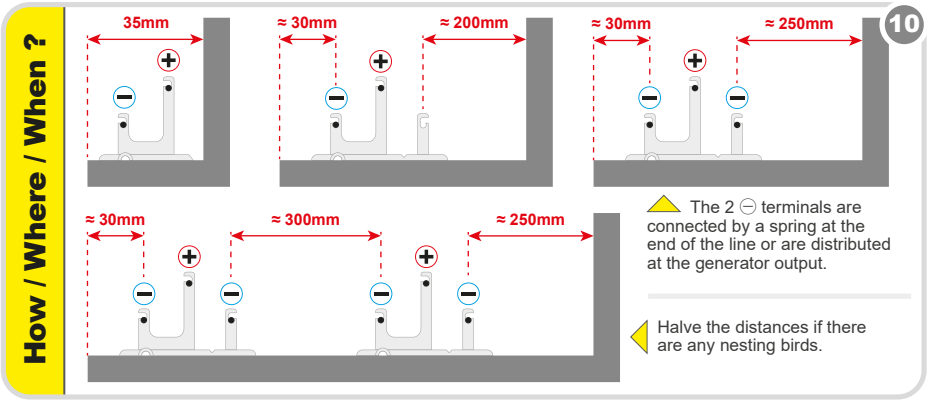
10
How / Where / When ?
35mm
≈ 30mm
≈ 200mm
≈ 30mm
≈ 250mm
≈ 30mm
≈ 300mm
≈ 250mm
The 2 ⊖ terminals are connected by a spring at the end of the line or are distributed at the generator output.
Halve the distances if there are any nesting birds.

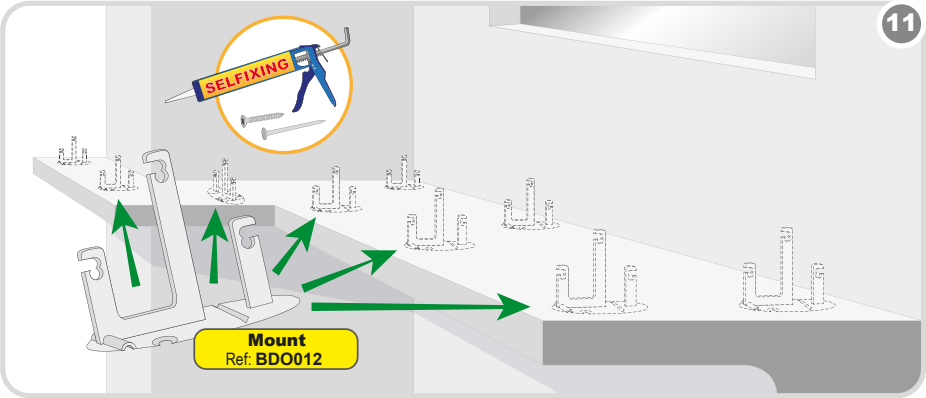
11
SELFIXING
Mount
Ref: BDO012

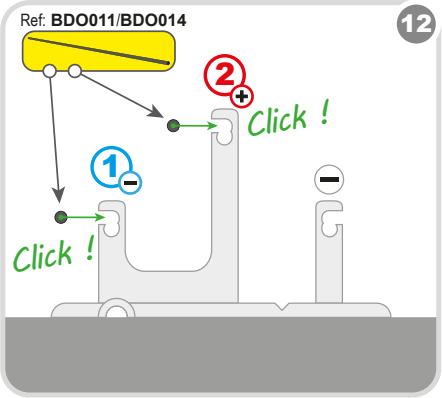
12
Ref: BDO011/BDO014
2
Click !
1
Click !

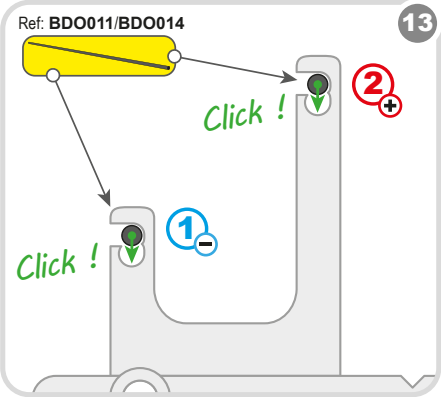
13
Ref: BDO011/BDO014
2
Click !
1
Click !

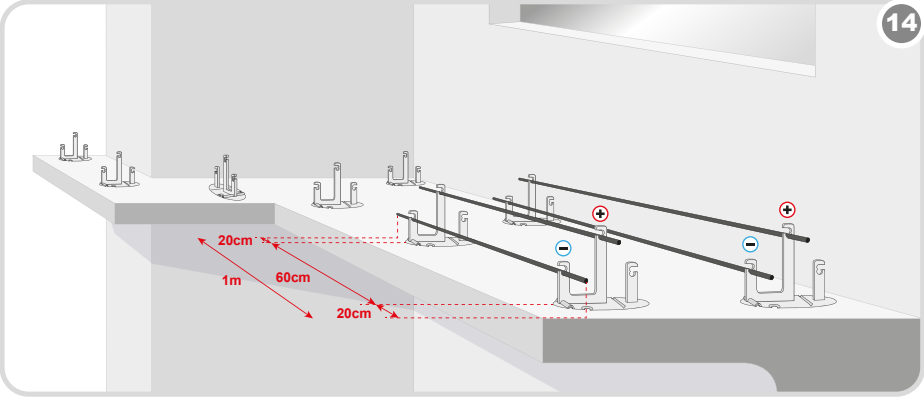
14
20cm
1m
60cm
20cm

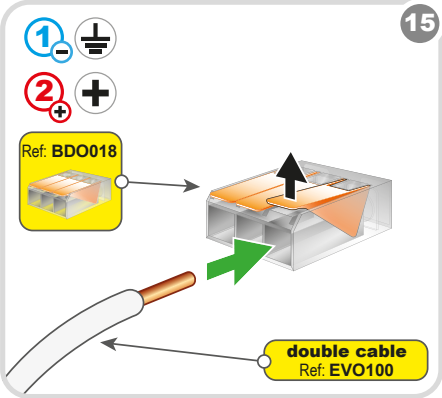
15
1
2
Ref: BDO018
double cable
Ref: EVO100

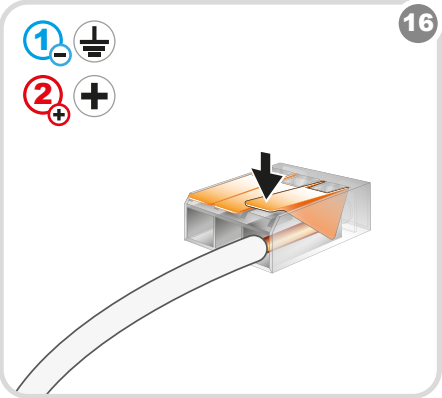
16
1
2

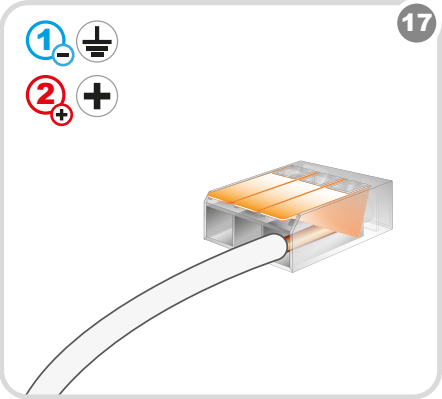
17
1
2

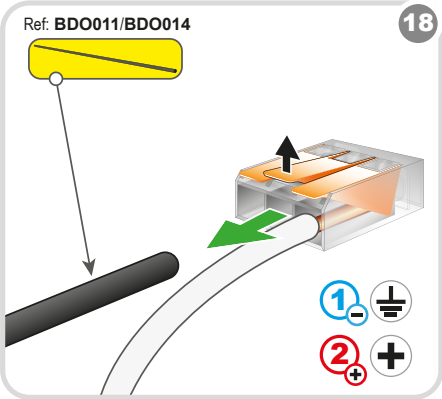
18
Ref: BDO011/BDO014
1
2

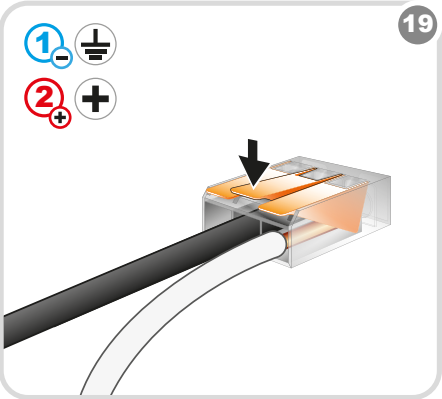
19
1
2

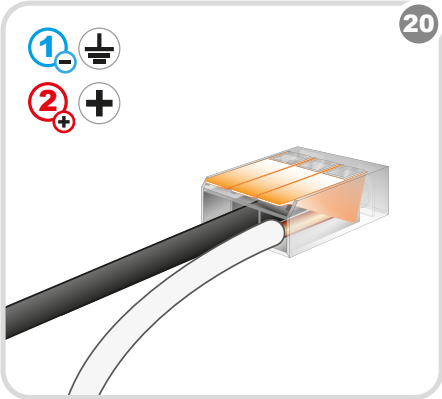
20
1
2

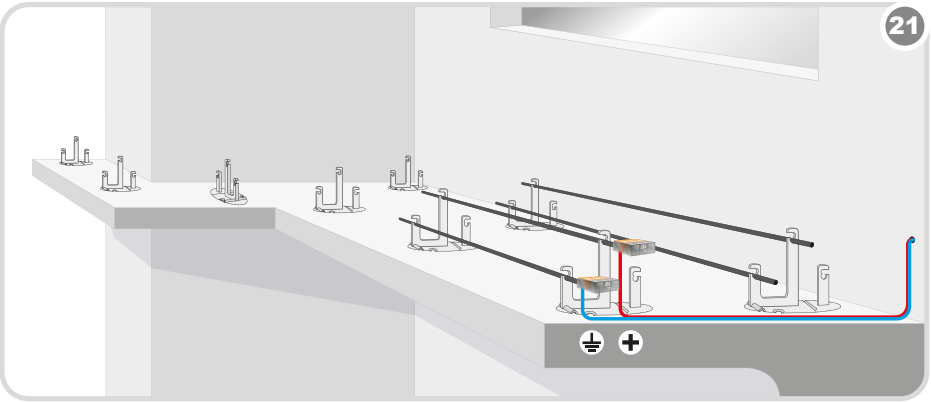
21

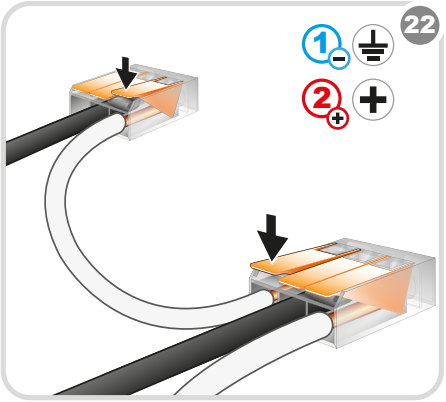
22

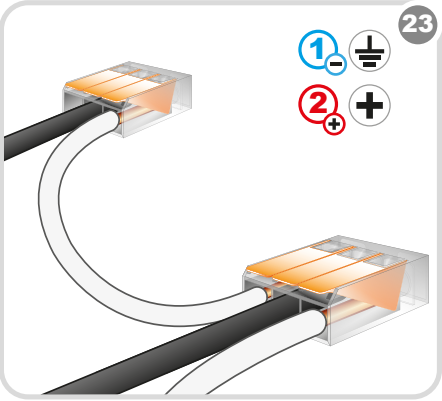
23

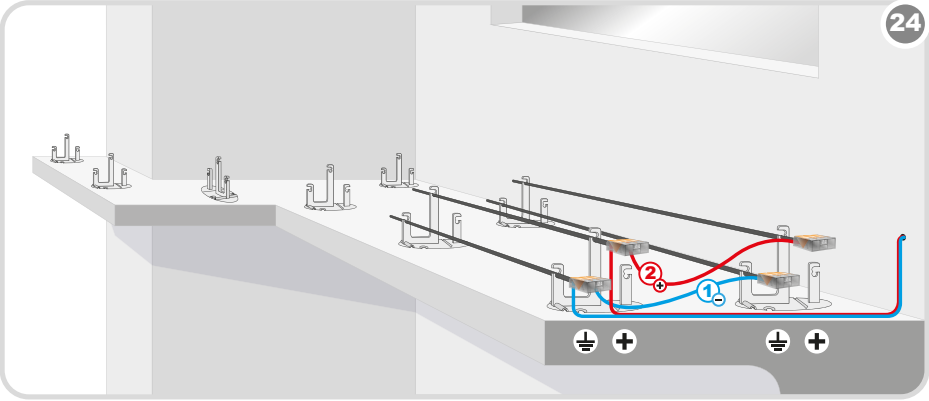
24

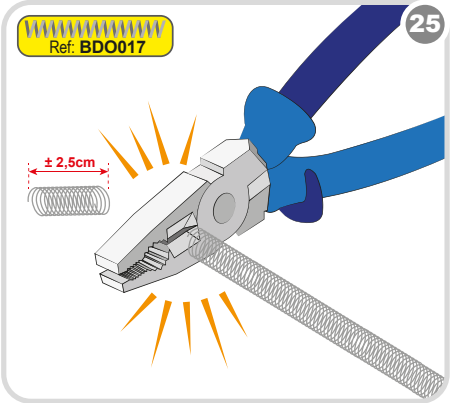
Ref: BDO017
25
± 2,5cm

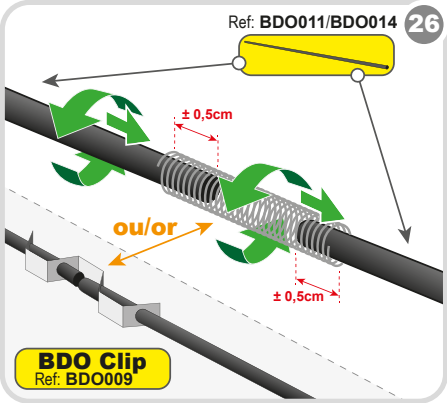
Ref: BDO011/BDO014
26
± 0,5cm
ou/or
± 0,5cm
BDO Clip
Ref: BDO009

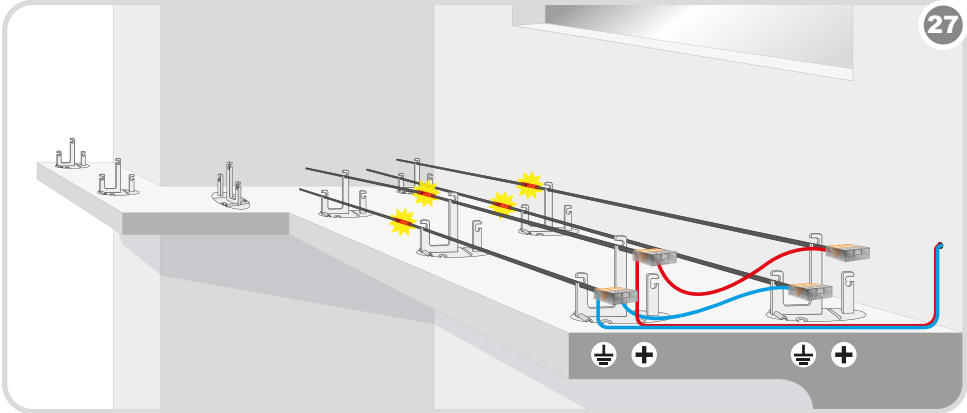
27

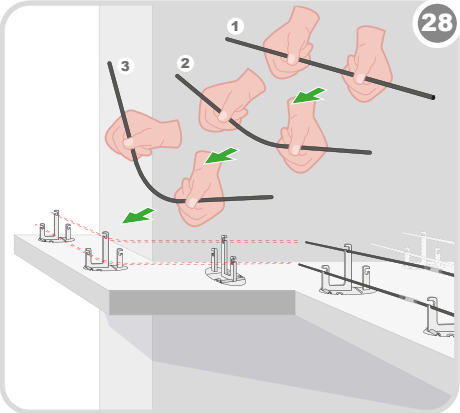
28
1
2
3

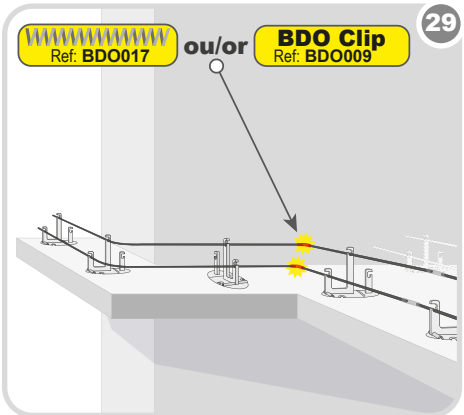
Ref: BDO017
ou/or
BDO Clip
Ref: BDO009
29

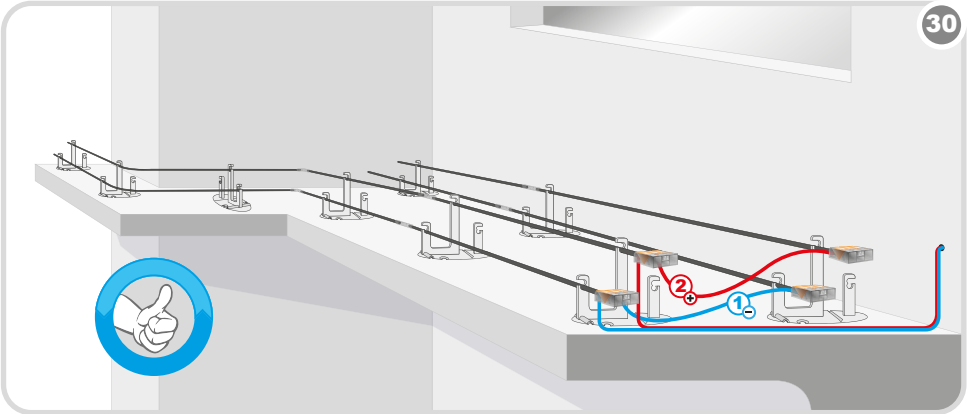
30

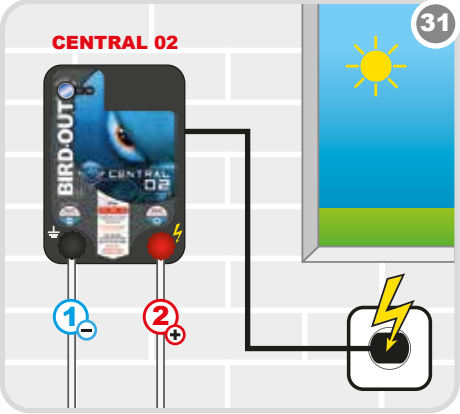

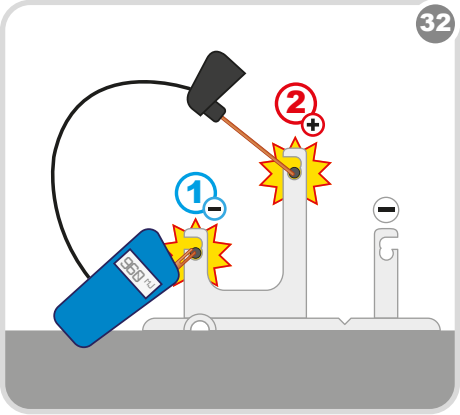

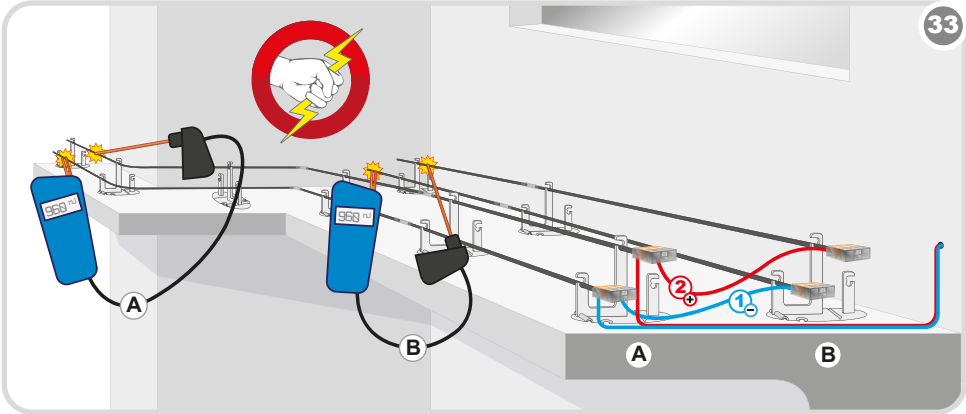

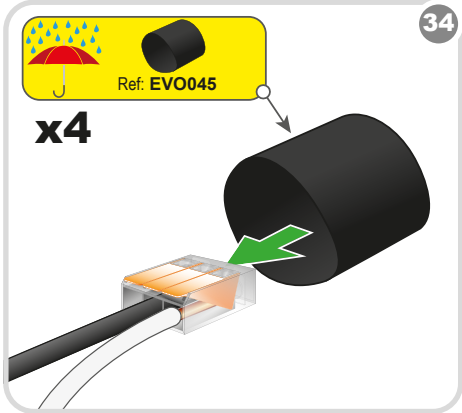

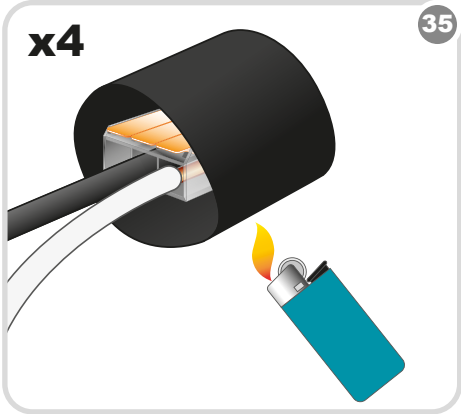

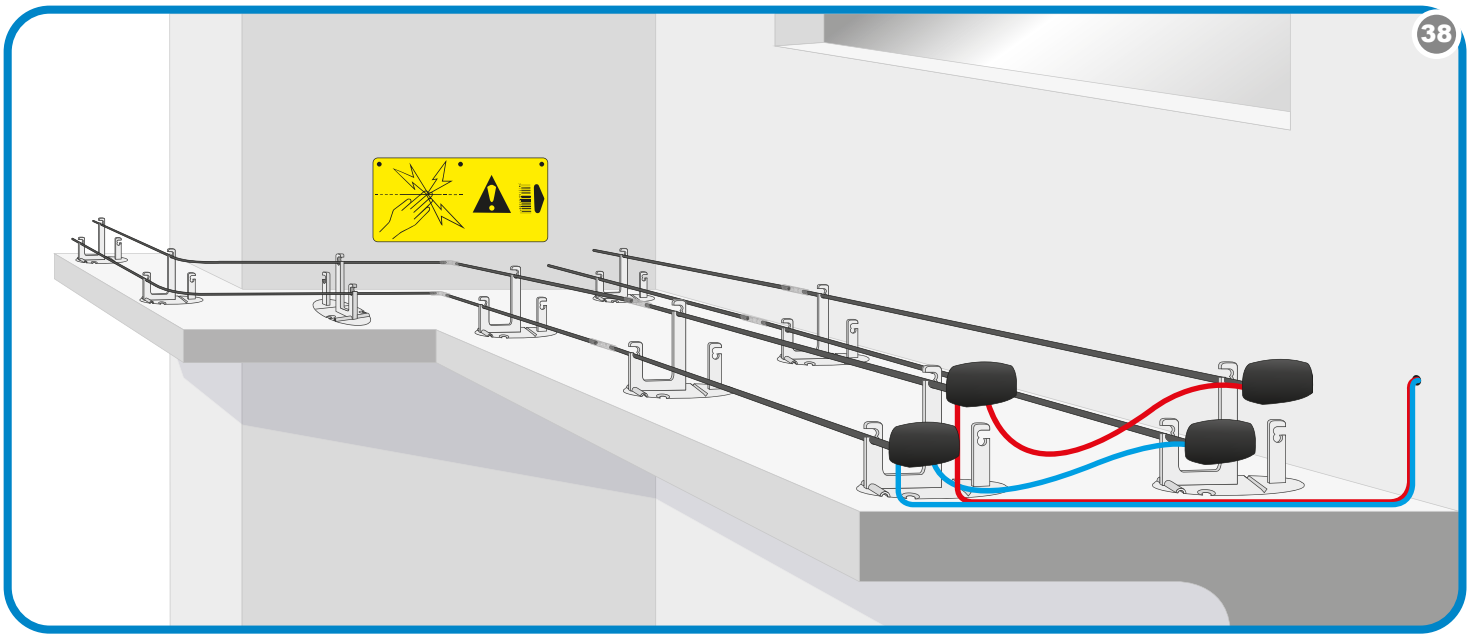

ZAC DU MOULIN – 12 RUE DU MEUNIER
95700 ROISSY EN FRANCE
WWW.ECOPIC.COM
TEL : + 33 1 73 27 20 40 – FAX : + 33 1 30 11 24 55
EMAIL : ECOPIC@ECOPIC.COM